waterloopkundig laboratorium
delft hydraulics laboratory

bed level computations for curved alluvial channels

F.G. Koch and C. Flokstra

publication no. 240

November 1980

bed level computations for curved alluvial channels

prepared for the 19th IAHR- congress,
New Delhi, India, February 1981

F.G. Koch and C. Flokstra

publication no. 240

November 1980

INTERNATIONAL ASSOCIATION FOR HYDRAULIC RESEARCH

BED LEVEL COMPUTATIONS FOR CURVED ALLUVIAL CHANNELS

(Subject A.d)

by

F.G. Koch

Project Engineer, Rivers and Navigation Branch,
Delft Hydraulics Laboratory, The Netherlands

and

C. Flokstra

Mathematical Engineer, Mathematics Branch,
Delft Hydraulics Laboratory, The Netherlands

Synopsis

A mathematical model to compute time-dependent bed level variations would be useful for predicting changes of bed configuration as a result of planned river channel regulation works, and for selecting an optimum design for instance for river works to improve the navigation channel. An attempt to develop such a model, which computes bed level variations in a longitudinal as well as a transversal direction, is described. Computed bed configurations are compared with configurations measured in axisymmetric channels and in a channel consisting of a curved section of 180° with a straight section up- and downstream of the bend.

Résumé

Un modèle mathématique pour calculer les changements de niveau du lit d'un fleuve peut être très utile pour prévoir les changements dans la configuration du lit résultant de travaux de régulation du fleuve, et pour choisir la solution optimale en vue d'améliorer la navigation fluviale. Une tentative de développer un tel modèle qui calcule les variations du lit dans le sens longitudinal et transversal, est décrite. La configuration calculée est comparée à celle mesurée dans des canaux axisymétriques et dans un canal constitué d'une courbe de 180° précédée et suivie de parties rectilignes.

1. Introduction

The complex character of flow and sediment transport in natural river bends makes it difficult to give a correct mathematical description of these phenomena. Therefore engineering problems concerned with river bends have up to now mostly been investigated using hydraulic scale models. A major advantage of mathematical models over scale models is the absence of scale effects, which may hamper the interpretation of movable bed model data (Struiksma [1]). Nowadays mathematical models for the time-dependent prediction of river bed level changes are available as long as only the cross-sectional average bed level is considered (Jansen [2]). However, the transverse bed profile is especially improtant in river bends for river engineering problems such as the prediction of navigability and depth of erosion near the banks. This means that a two-dimensional rather than a one-dimensional model is needed.

As a first step towards the construction of such a more general mathematical model this paper describes an ad-hoc model developed to investigate whether or not a strongly simplified description of the flow can be used to obtain a reliable prediction of the bed configuration. For this purpose bed level computations were executed with three different strongly schematized flow models. Since the three flow models gave similar results, only one will be considered in the present paper. The ad-hoc model is at present limited to channels, where (see Figure 1):

- the Froude number is low;
- the depth is small compared to the width;
- the width is small compared to the radius of curvature;
- the width is constant;
- the alignment consists of several sections with each section having a constant radius of curvature;
- the side walls are fixed and vertical;
- the movable bed consists of sediments of uniform grain size; and
- only bed load is considered, which for example is justified for the major Dutch rivers.

Bed forms such as ripples and dunes are not reproduced by the model, and the computed bed configuration has to be considered as though the irregularities existing in natural rivers have been smoothed out.

The investigations described in this paper have been carried out by a research team working within the framework of the joint research programme "Applied Research Waterstaat on Rivers", in which the Rijkswaterstaat Directorate for Water Management and Research, the Delft University of Technology and the Delft Hydraulics Laboratory are collaborating.

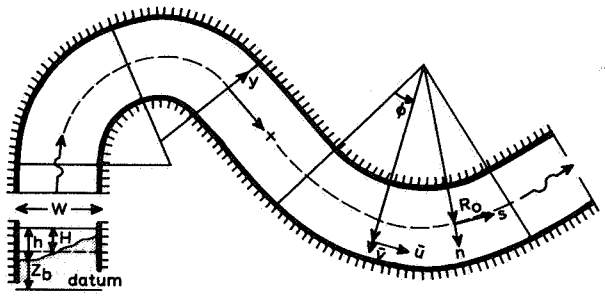

Figure 1 Definition sketch

2. Outline of the model

The model can be divided into two main parts, a computation of a flow field and a sediment transport computation (see Figure 2). The input data needed

1. STRUIKSMA, N.,
   Recent developments in design of river scale models with mobile bed,
   Proc. Symposium on River Engineering, Subject D, IAHR, Belgrade, 1980.

2. JANSEN, P. Ph,
   Principles of river engineering, the non-tidal alluvial river,
   Pitman Publishing Ltd, London, 1979.

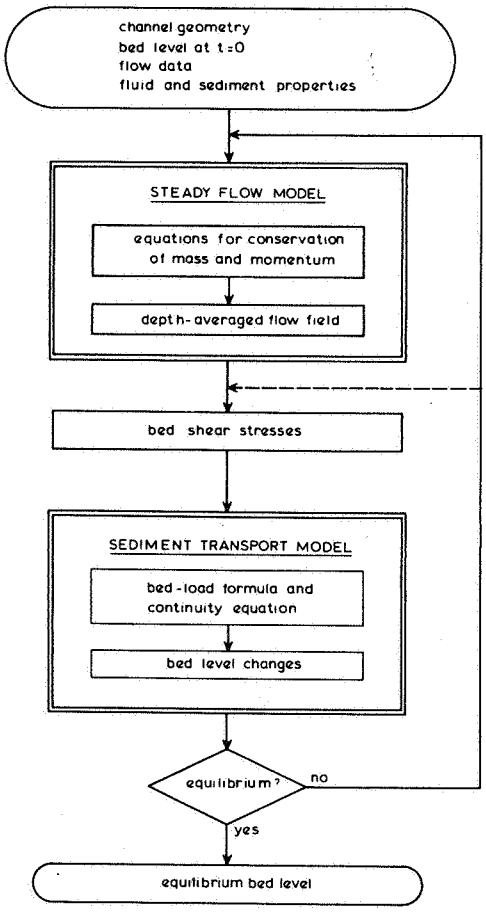

Figure 2 Flow chart of computational procedure

for these computations are the independent variables describing the fluid properties, sediment properties, flow characteristics, channel geometry and the initial bed level configuration. The depth averaged flow field described by the depth-averaged velocity vector throughout the channel is computed. Bed shear stress components are calculated from this flow field, assuming the vertical distribution of the horizontal velocity components to be known. Next, the sediment transport vector is calculated from these bed shear stresses, using an adapted sediment transport formula. The rate of bed level change follows from the equation of continuity of the sediment, and a new bed configuration can be computed numerically. After a certain time interval, the flow computation is repeated with a new bed configuration, and this iteration procedure is repeated until the rate of bed level change is negligible, and the equilibrium bed level is obtained.

3. Flow model

Disturbances of the bed travel at a much lower celerity than disturbances of the flow. Therefore steady flow models can be used for non-steady bed level computations (de Vries [3]). Momentum and continuity equations describing the depth-averaged flow dield are given by Kuipers and Vreugdenhil [4]. The flow field is described by the depth-averaged velocity components $\bar{u}$ and $\bar{v}$ in the horizontal ϕ- and r-directions respectively. If not otherwise indicated the results presented in this paper have been computed with a frictional flow model, which is strongly simplified by neglecting the inertia terms in the momentum equations.

Other simplified flow models used for bed level computations have been the so-called:

- potential flow model, where the frictional terms in the momentum equations have been neglected, and

3. VRIES, M. de,
Considerations about non-steady bed-load transport in open channels,
Proc. 11th IAHR Congr., Paper 38, Leningrad, 1965.

4. KUIPERS, J. and VREUGDENHIL, C.B.,
Calculations of two-dimensional horizontal flow,
Delft Hydraulics Laboratory, Report S 163, part 1, October 1973.

- Engelund flow model which is an adapted version of a flow model developed by Engelund [5] to be used for the prediction of the equilibrium bed level in sinusoidal bends.

Up to now these two models have not given better results.

4. Sediment transport model

In the case of curved flow, the depth-averaged velocity $\bar{u}$ is no longer a good parameter to describe the forces acting on the bed material, since the helical flow causes a considerable bed shear stress component perpendicular to the main flow direction whilst the depth-averaged value of the helical velocity component equals zero. Therefore the bed load will be given as a function of the local bed shear stresses τ_{bs} and τ_{bn}, parallel and perpendicular to the depth-averaged streamlines, respectively. De Vriend [6] derived the following formulas to compute these bed shear stress components for wide shallow channels with a modest curvature from the depth-averaged flow field:

$$\tau_{bs} = \rho \frac{g}{C^2} \bar{u}^2, \text{ and} \tag{1}$$

$$\tau_{bn} = - \rho \frac{g}{\kappa^2 C^2} 2 \frac{h}{R_s} \bar{u}^2 \left(1 - \frac{\sqrt{g}}{\kappa C}\right), \tag{2}$$

where R_s is the radius of curvature of the stream lines, κ is the von Karman's constant, C is Chézy's roughness coefficient, and s is the coordinate parallel to the direction of the stream lines. For the present ad-hoc computation R_s has been replaced by the local radial coordinate r.

Due to the considerable bed level slopes occuring in curved alluvial channels gravity forces will act on the sediment particles, and the direction of the sediment transport will no longer coincide with the direction of the total bed shear stress

$$\tau_b = \sqrt{\tau_{bs}^{\ 2} + \tau_{bn}^{\ 2}}. \tag{3}$$

The forces tangential to the bed acting on a sediment particle are presented in Figure 3, where:

- $\mu K_b = \mu \frac{1}{4} \pi d^2 \tau_b f$ is the force caused by that part of the bed shear stress $\mu\tau_b$ that acts on the sediment particles,
- $\delta = \arctan(\tau_{bn}/\tau_{bs}) + \arctan(\bar{v}/\bar{u})$ is the angle between the vector τ_b and the direction of the channel axis,
- μ is the ripple factor for which at present the value one has been introduced,
- $G_b = G\sqrt{(\partial z_b/\partial x)^2 + (\partial z_b/\partial y)^2}$ is the component of the particle under-water weight $G = \frac{1}{6} \pi d^3 (\rho_s - \rho) g e$,

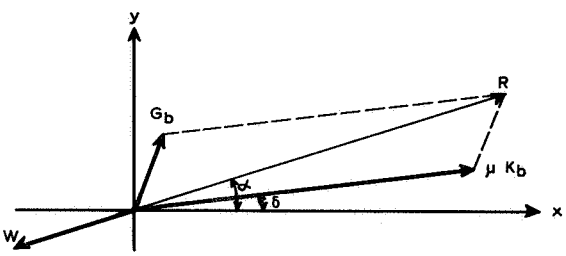

Figure 3 Forces acting on a sediment particle

5. ENGELUND, F.,
Flow and bed topography in channel bends,
Journal of the Hydraulics Division ASCE, Vol. 100, HY 11, Nov. 1974.

6. VRIEND, H.J. de,
A mathematical model of steady flow in curved open channels,
Delft University of Technology, Department of Civil Eng., Communications on Hydraulics, Report no. 76-1, 1976.

- $W = G \tan\phi$ is the force caused by the friction between the particle and the bed,
- ϕ is the angle of internal friction,
- e and f are shape factors, which are taken as equal,
- d is the median sediment particle diameter.

Bed slopes are assumed to be so small that terms of the order of magnitude $(\partial z_b/\partial x)^2$ and $(\partial z_b/\partial y)^2$ are negligible in comparison to unity.
With the above assumptions the direction of the sediment transport (average particle movement) is given by

$$\tan\alpha = \frac{K_b \sin\delta - G\,(\partial z_b/\partial_y)}{K_b \cos\delta - G\,(\partial z_b/\partial_x)} \quad . \tag{4}$$

The direction of the frictional force W is opposite to the direction of the resulting force R, so W does not influence the direction of the sediment transport.

From the existing bed load formulae for straight alluvial channels the well-known Meyer-Peter and Müller transport formula has been selected for adaption to curved channels. The original formula can be written as:

$$s = a\,(\mu\tau_b - \tau_{co})^{3/2}\,, \tag{5}$$

where s is the sediment transport in volume (incl. pores) per unit width and time, $a = 8/\{(1-\varepsilon)g(\rho_s-\rho)\sqrt{\rho}\}$, ε is the pore percentage, $\tau_b=\rho ghi$ is the bed shear stress, and $\tau_{co}=0.047(\rho_s-\rho)gd$ is an empirical value which happens to be equal to the Shields criterion for the initiation of motion. Assuming the force R to have the same effect on the sediment particles as the force μK_b in straight flow the transport formula can be written as follows for curved channels:

$$s = a\,(\mu A\tau_b - B\tau_{co})^{3/2}, \tag{6}$$

where:

- $A = \cos(\alpha-\delta)$, and (7)
- $B = 1 + 14.18\,\{(\partial z_b/\partial x)\cos\alpha - (\partial z_b/\partial y)\sin\alpha\}$. (8)

5. Bed level variation

Besides the expressions describing the sediment movement, Equations (4) and (6), the following continuity equation for the sediment transport is needed to calculate time-dependent bed level variations:

$$\frac{\partial z_b}{\partial t} + \frac{\partial s_\phi}{r\partial\phi} + \frac{\partial s_r}{\partial r} + \frac{s_r}{r} = 0, \tag{9}$$

where $s_r = s\sin\alpha$ and $s_\phi = s\cos\alpha$.

For the numerical computation of the bed level variation the water surface level is used as a constant horizontal reference level. Radial water surface level variations are small in comparison with bed level variations. The bed level at the upstream boundary is considered to be fixed, and should be far enough upstream of the bend in order not to be influenced by the bend. At the side walls the radial component of the sediment transport $s_r = 0$.

Starting from an arbitrary bed topography, an equilibrium situation will always be reached after some time. The equilibrium bed topography is defined as the topography that does not change in time under steady flow conditions. Such a topography can be obtained mathematically by a numerical computation marching forward in time over a sufficiently long period to obtain a time derivative $\partial z_b/\partial t$ being nearly equal to zero.

6. Results and conclusions

Bed level measurements in curved flumes with a movable bed have been executed by Zimmermann [7] in a 320° bend, and by the Laboratory of Fluid Mechanics (LFM) of the Delft University of Technology in a bend of 180° with a straight section up- and downstream of the bend. For both the flumes, the measured equilibrium bed configuration has been compared with the computed configuration. Channel parameters are presented in Table 1. From the extensive series of experiments executed by Zimmermann two tests have arbitrarily been selected for comparison with the mathematical model. The computations started with a horizontal bed level. In the flume used by Zimmermann the flow and the bed topography reach a fully-developed state, viz. the whole topography can be described by one cross-profile, and a simple axisymmetric computation can be used to compute that bed profile. The axisymmetric computation has been described by Koch [8], and the results for the Zimmermann tests are presented in Figure 4. The computed profile fits well to the measured bed level. The axisymmetric bed profile is purely a result of the helical flow, and it can be concluded that this phenomena is described sufficiently accurate in the sediment transport model.

description	B	H	R_o	Q	d	C
	m	m	m	m^3/s	$m*10^{-3}$	$m^{\frac{1}{2}}/s$
Zimmermann (R_{II}-3)	0.6	0.071	2.55	0.013	0.21	20.1
Zimmermann (R_{II}-6)	0.6	0.089	2.55	0.013	0.21	15.9
LFM-flume	1.7	0.191	4.25	0.17	0.78	25

Table I Channel parameters

For the LFM-flume the measured and the computed bed topography are presented in Figure 6, where H is the uniform waterdepth of 0.191 m at t = 0, and the initial horizontal bed level has been used as datum for z_b and H. Bed profiles are compared for two cross-sections in Figure 5. The resemblance is rather poor. The measured bed configuration has locally a much steeper cross-profile than the computed profile. The computed profile is quite uniform throughout the whole bend and close to an axisymmetric computed bed profile. So non-axisymmetric effects, as a result of the fact that the curvature of the streamlines is not equal to the local radial coordinate, are not correctly reproduced by the mathematical model.

At present it is tried to improve the mathematical model by introducing for R_s in Equation (2) the curvature of the computed streamlines. In case this does not improve the computed bed level, it probably will be necessary to introduce a more complicated flow model in order to obtain more realistic streamline curvatures.

The development of the transverse bed profile is only a matter of hours, which is in agreement with observations. According to the computations the equilibrium bed level in the Zimmermann flume will be reached in half an hour, and in the LFM-flume within 10 hours. This short period makes it difficult to measure the bed level variation as a funtion of the time

---

7. ZIMMERMANN, C.,
Sohlausbildung, Reibungsfaktoren und Sedimenttransport in gleichförmig gekrümmten und geraden Gerinnen (in German; Bed forms, friction factors and sediment transport in circular and straight flumes),
University of Karlsruhe, Ph. D. dissertation, June, 1974.

8. KOCH, F.G.,
Bed level computations for axisymmetric curved channels,
Delft Hydraulics Laboratory, Report R 657-IX, 1980.

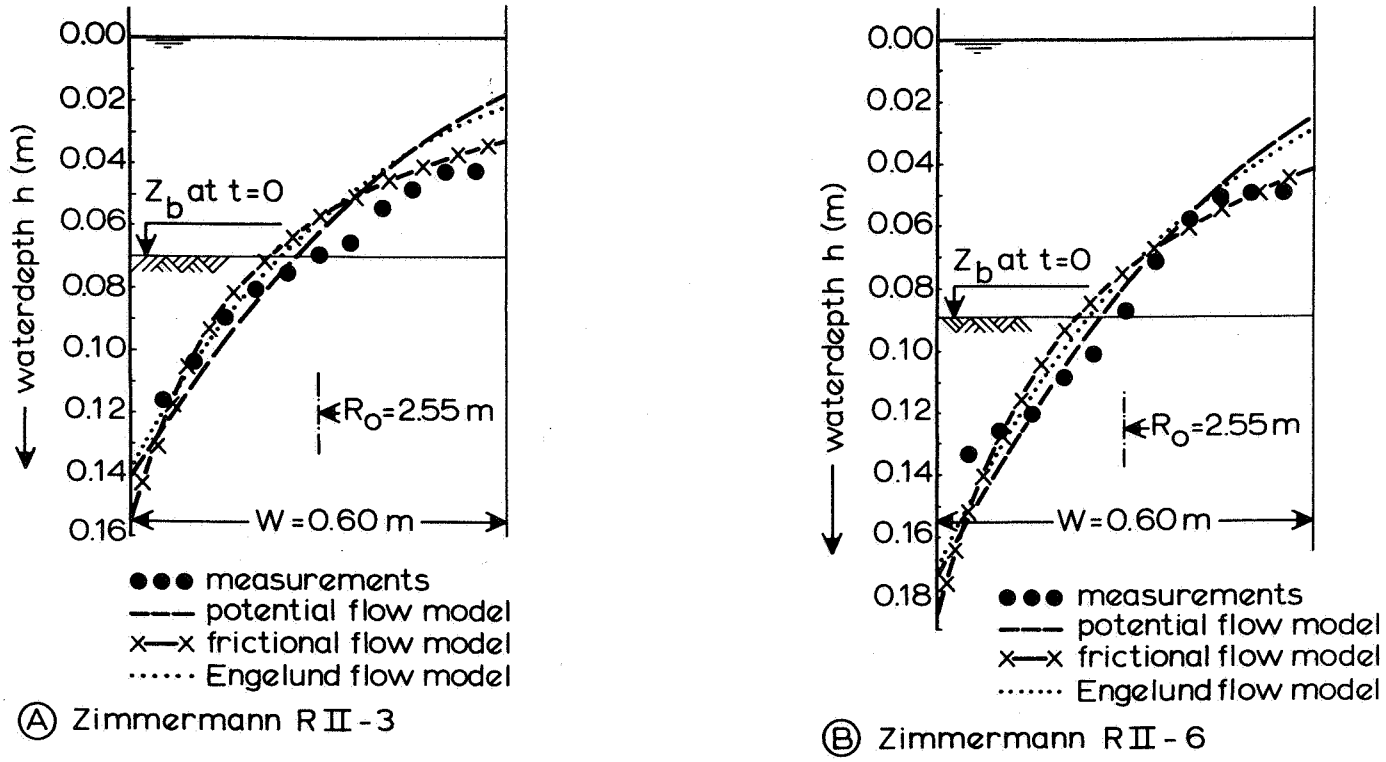

FIG. 4: EQUILIBRIUM TRANSVERSE BED PROFILES

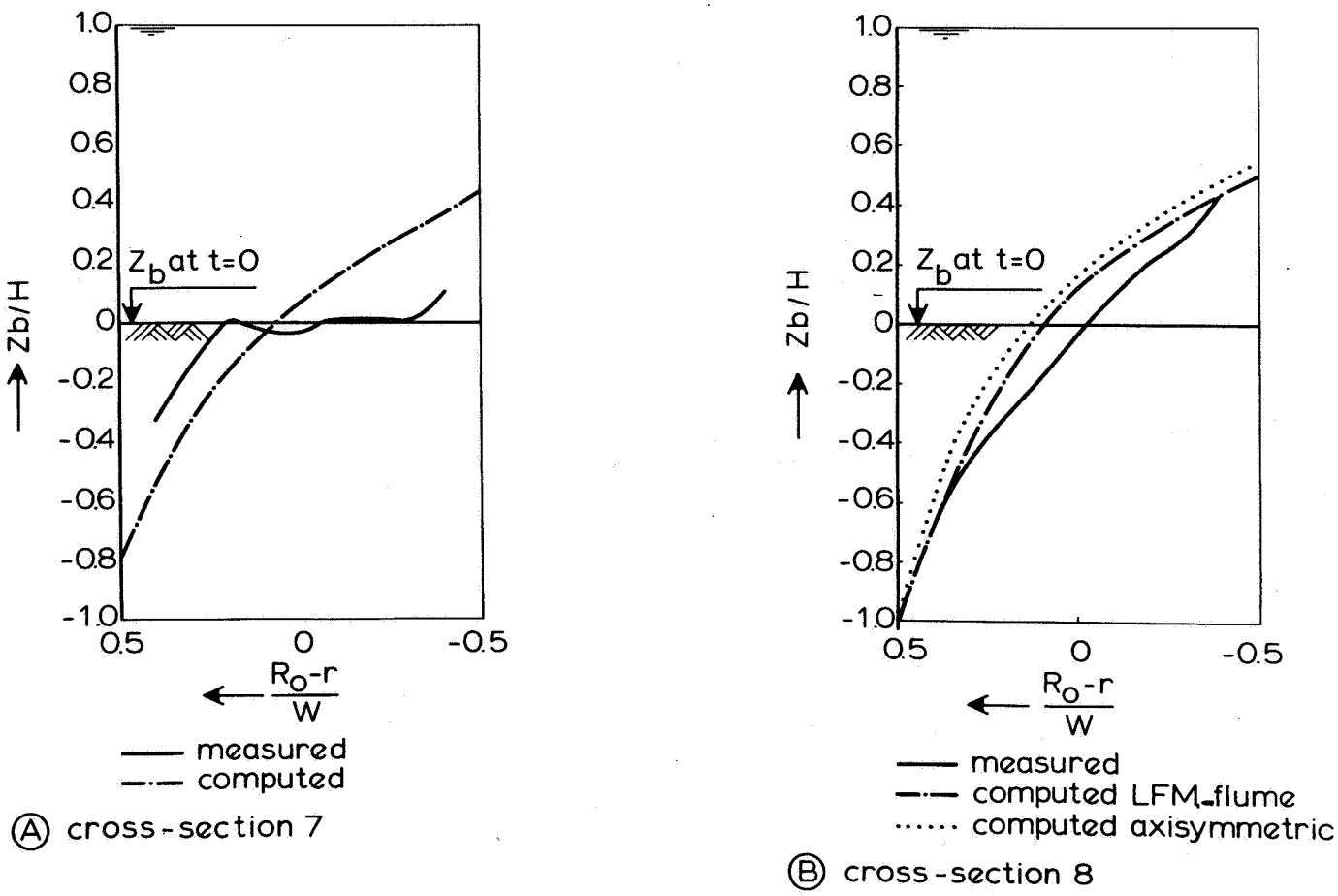

FIG. 5: EQUILIBRIUM TRANSVERSE BED PROFILES

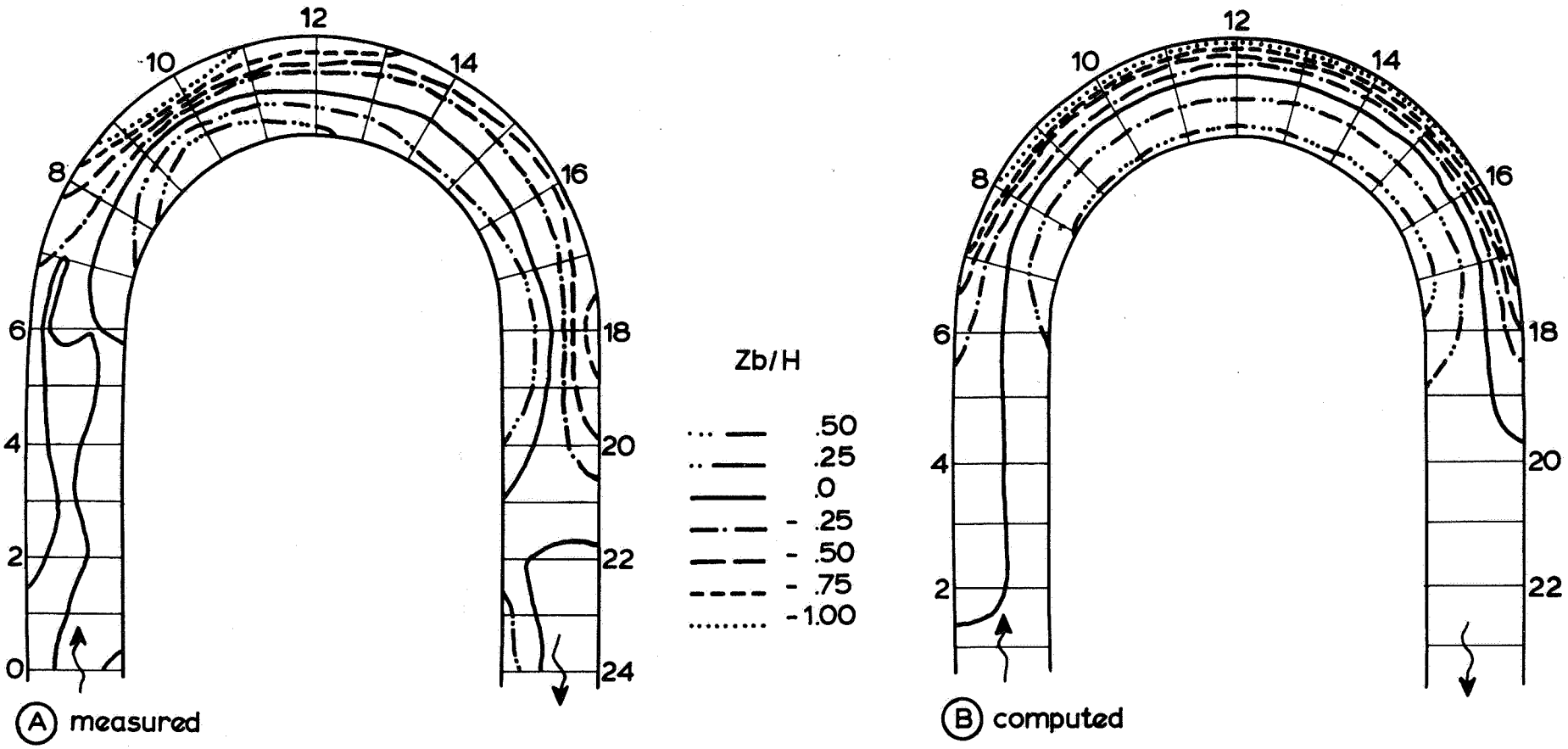

FIG. 6 EQUILIBRIUM BED TOPOGRAPHY (LFM-FLUME)